To be used properly, this template must be opened in a vector based graphic program like Adobe Illustrator.

10'x10' Canopy Tent with 1 Full Wall (30% Scale)
CPT-3002T1KD

Notes:
- Keep all artwork away from the edge (reflected by the red dotted line) of the template
- **Use ONLY Pantone Solid Coated colors**
- **Convert all text to outlines**

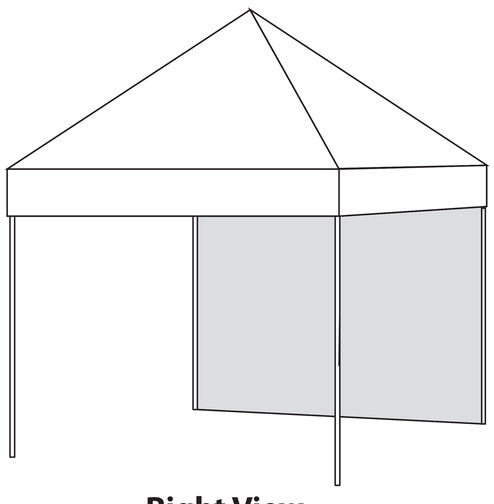

Right View

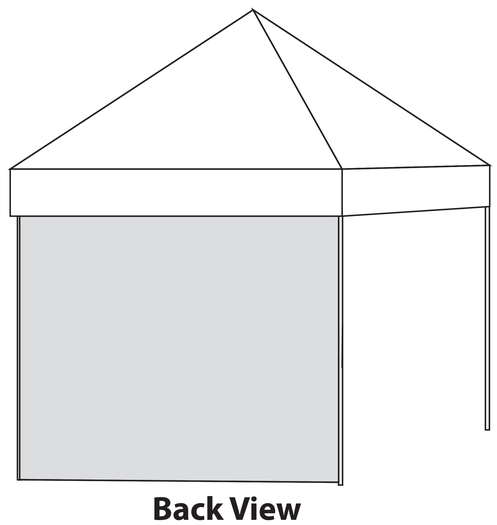

Back View

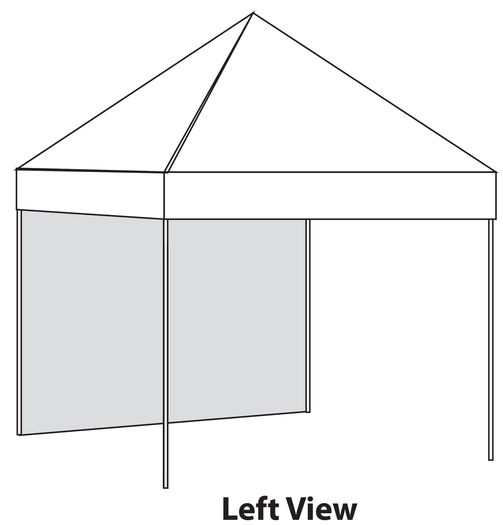

Left View

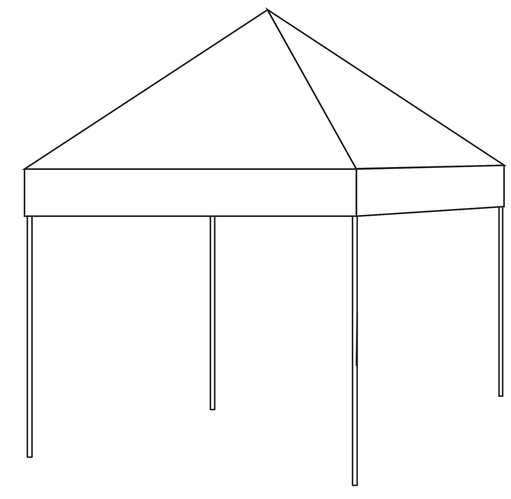

CANOPY TOP

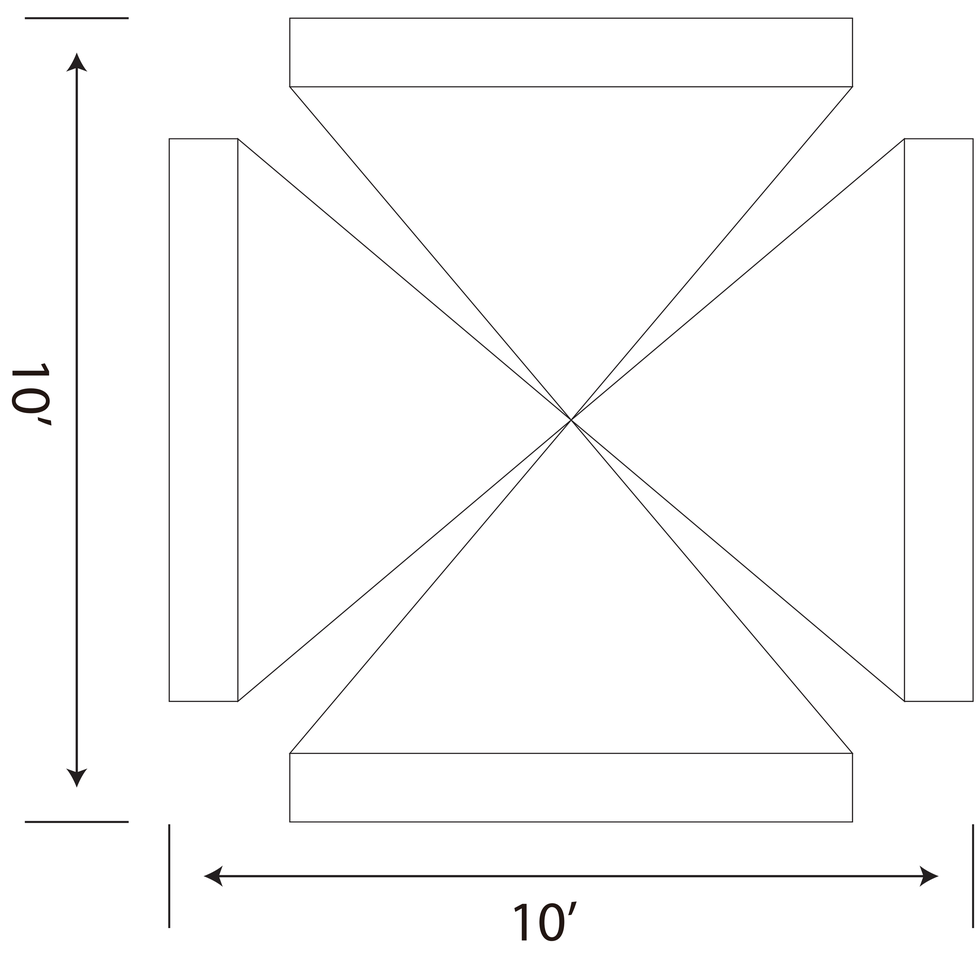

Valance

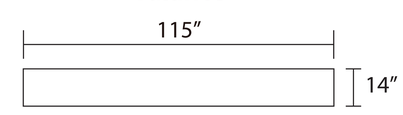

Full Wall - inside

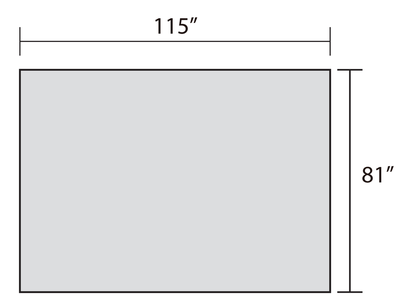

Full Wall - outside

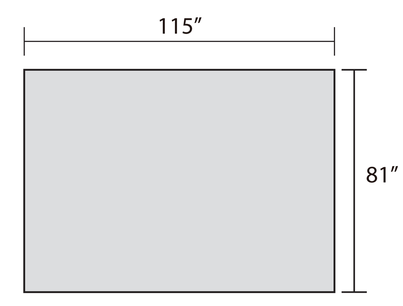

To be used properly, this template must be opened in a vector based graphic program like Adobe Illustrator.

10'x10' Canopy Tent with 1 Full Wall (70% Scale)
CPT-3002T1KD

Notes:
- Keep all artwork away from the edge (reflected by the red dotted line) of the template
- Please use caution when artwork is close to seam lines (reflected by the green dotted line)
- **Use ONLY Pantone Solid Coated colors**
- **Convert all text to outlines**

CANOPY

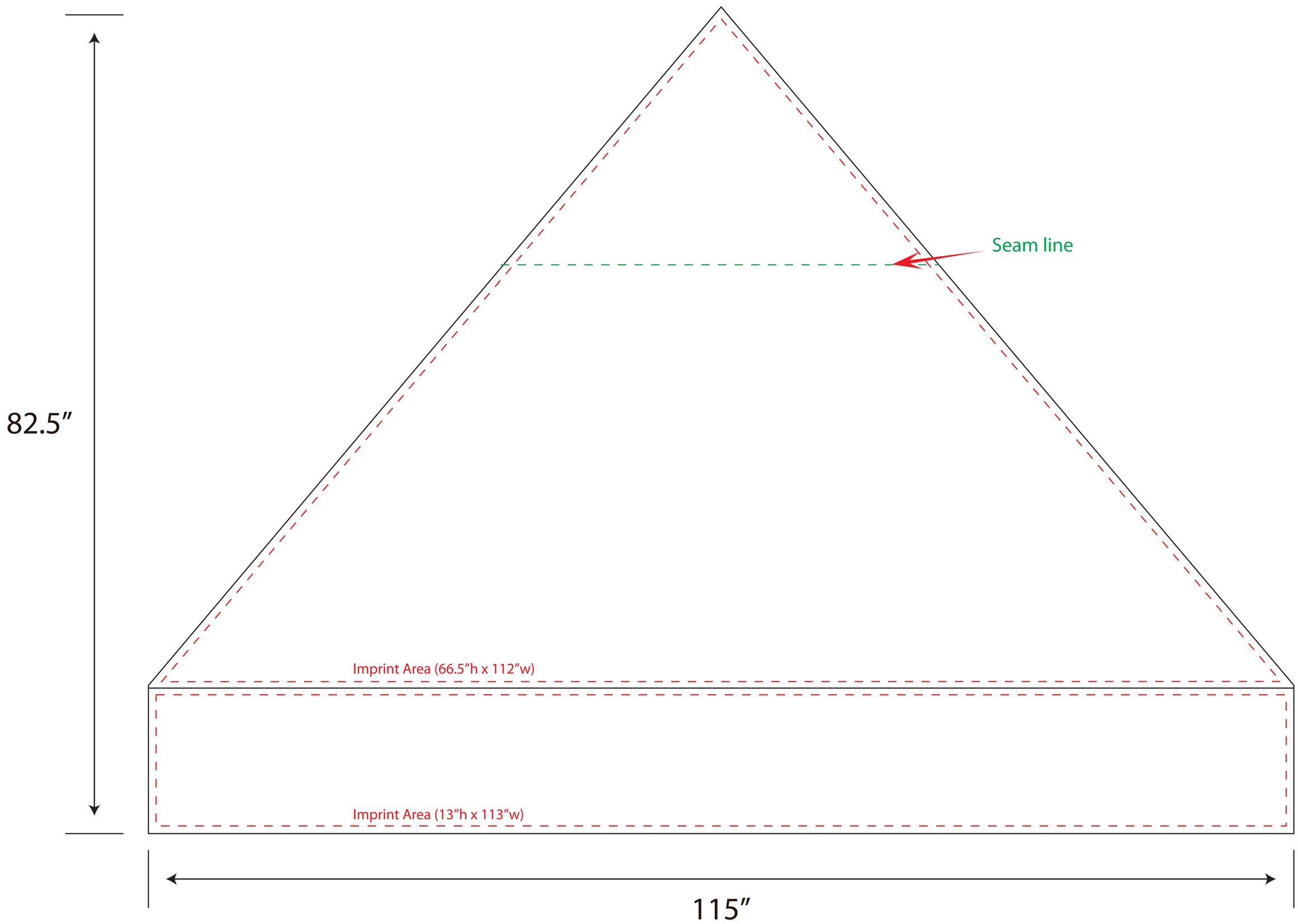

To be used properly, this template must be opened in a vector based graphic program like Adobe Illustrator.

10'x10' Canopy Tent with 1 Full Wall (70% Scale)
CPT-3002T1KD

Notes:
- Keep all artwork away from the edge (reflected by the red dotted line) of the template
- Please use caution when artwork is close to seam lines (reflected by the green dotted line)
- **Use ONLY Pantone Solid Coated colors**
- **Convert all text to outlines**

FULL WALL - inside

To be used properly, this template must be opened in a vector based graphic program like Adobe Illustrator.

10'x10' Canopy Tent with 1 Full Wall (70% Scale)
CPT-3002T1KD

Notes:
- Keep all artwork away from the edge (reflected by the red dotted line) of the template
- Please use caution when artwork is close to seam lines (reflected by the green dotted line)
- **Use ONLY Pantone Solid Coated colors**
- **Convert all text to outlines**

FULL WALL - outside