# 10’x20’ Canopy Tent Template

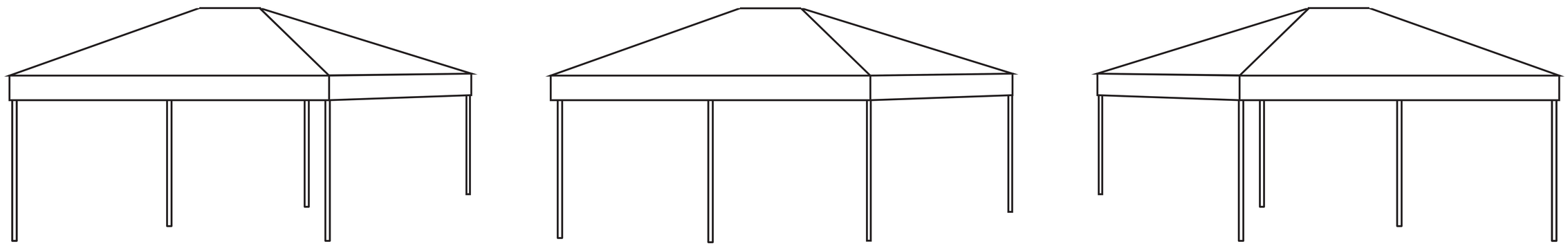

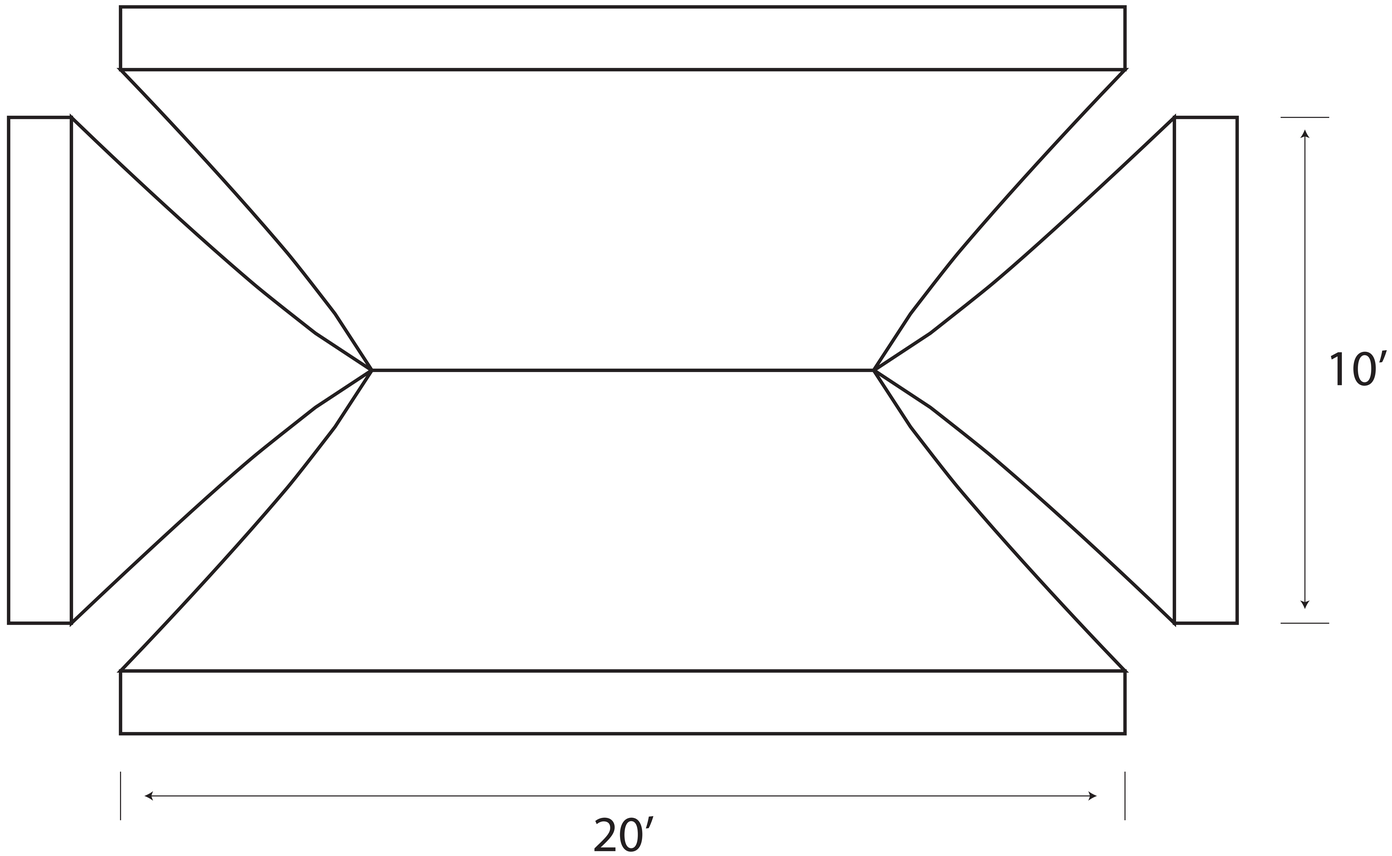


To be used properly, this template must be opened in a vector based graphic program like Adobe Illustrator.

10’x20’ Canopy Tent (30% Scale)
CPT-3001T2K

Notes:
- Keep all artwork away from the edge (reflected by the red dotted line) of the template
- Please use caution when artwork is close to seam lines (reflected by the green dotted line)
- **Use ONLY Pantone Solid Coated colors**
- **Convert all text to outlines**

# Canopy Front and Back

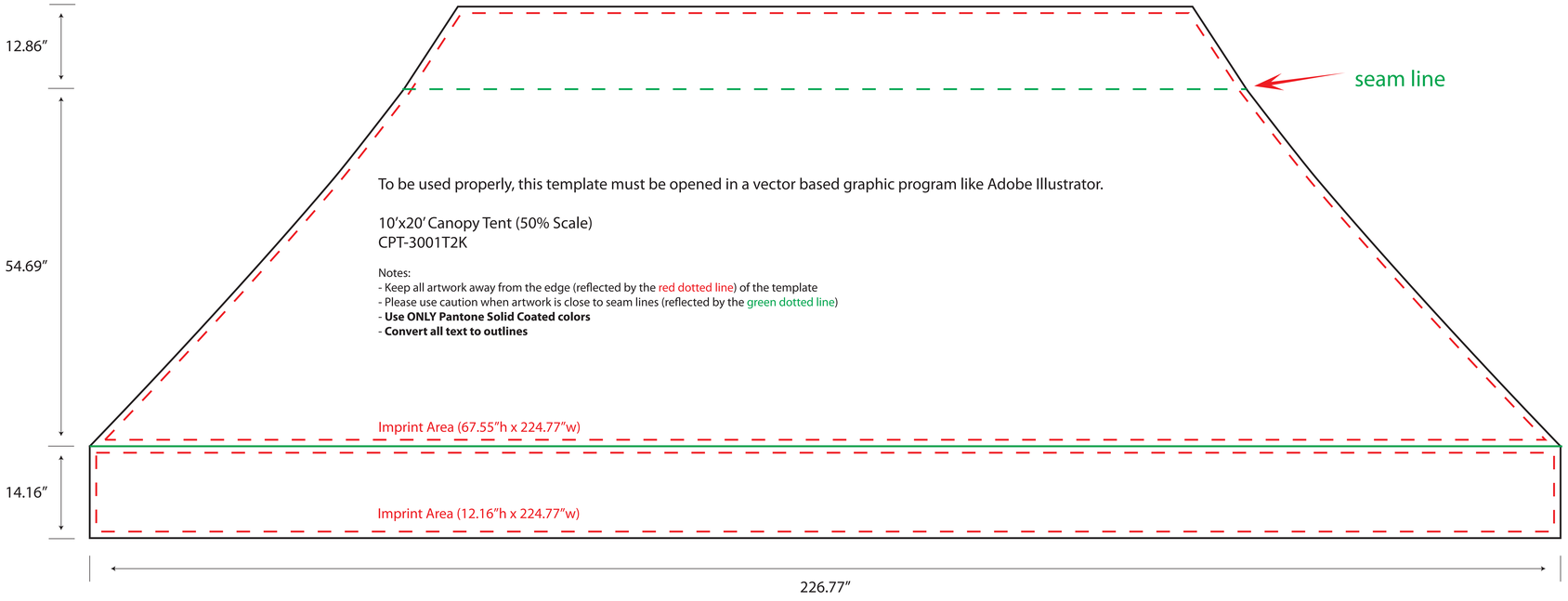


To be used properly, this template must be opened in a vector based graphic program like Adobe Illustrator.

10'x20' Canopy Tent (50% Scale)
CPT-3001T2K

Notes:
- Keep all artwork away from the edge (reflected by the red dotted line) of the template
- Please use caution when artwork is close to seam lines (reflected by the green dotted line)
- **Use ONLY Pantone Solid Coated colors**
- **Convert all text to outlines**
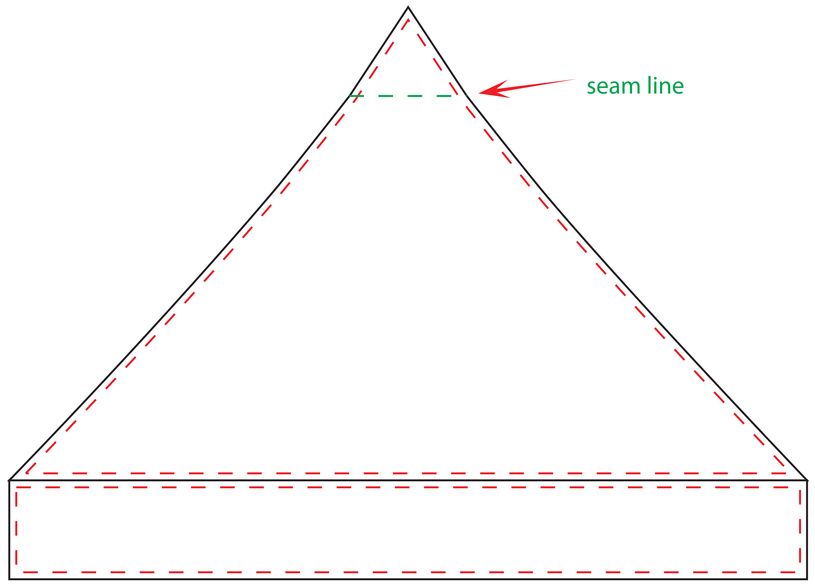
# Canopy Sides