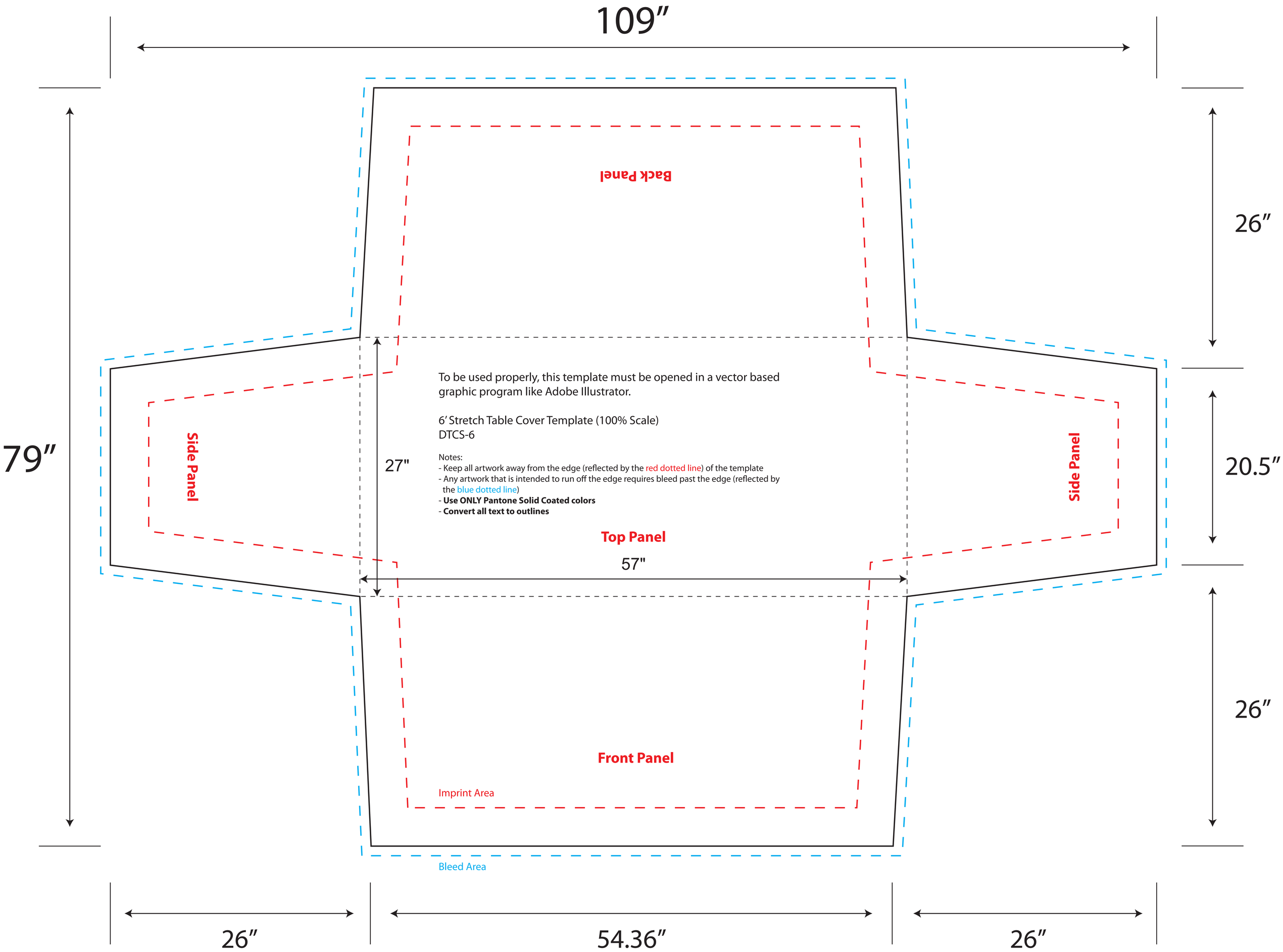
109″
79″
26″
20.5″
26″
Back Panel
Side Panel
Side Panel
27"
To be used properly, this template must be opened in a vector based graphic program like Adobe Illustrator.
6′ Stretch Table Cover Template (100% Scale)
DTCS-6
Notes:
- Keep all artwork away from the edge (reflected by the red dotted line) of the template
- Any artwork that is intended to run off the edge requires bleed past the edge (reflected by the blue dotted line)
- Use ONLY Pantone Solid Coated colors
- Convert all text to outlines
Top Panel
57"
Front Panel
Imprint Area
Bleed Area
26″
54.36″
26″

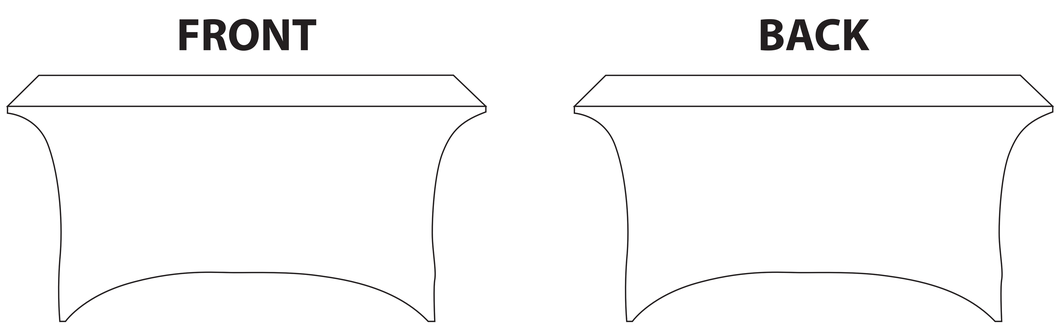
FRONT
BACK